Site Accessibility Evaluation

Office of Emergency Management

3755 Mark Dabling Blvd Northeast Colorado Springs, CO 80907

Accessibility Evaluation

Inspection Date: 11/14/2018
Inspector: David Mejia

Prepared By

(719) 520 - 6866
www.elpasoco.com

Powered by BlueDAG

Parking Lot

Finding: 1

Parking lot has alligator cracking throughout. Difficult to identify van accessible stalls due to faded paint/striping.

2010 ADAS Section Recommended
None

Citation:

2010 ADAS Section: Recommended

As Built:

Parking lot in need of repair

Recommendation:

Parking lot needs to be resurfaced and restriped. Also, the 2 van accessible parking stalls need to be relocated closer to the front entrance and have a maximum cross and running slope no greater than 2%.

Notes:

Corrective Action: Work order # 461134 submitted on 5/2/2019

Finding 224783 Main Photo

Parking Lot

Finding: 2

The van stall is missing a sign identifying it as a van accessible stall.

Parking space identification signs shall include the International Symbol of Accessibility. Signs identifying van parking spaces shall contain the designation "van accessible."

2010 ADAS Section 502.6
Parking space identification signs shall include the International Symbol of Accessibility complying with 703.7.2.1. Signs identifying van parking spaces shall contain the designation "van accessible." Signs shall be 60 inches (1525 mm) minimum above the finish floor or ground surface measured to the bottom of the sign.

Citation:

2010 ADAS Section: 502.6

As Built:

No van accessible stalls nor International symbol of accessibility.

Recommendation:

Install 2 van accessible signs to incude posts, van accessible signs and international sybol of accessibility near the front of the building. Also re-stripe and ensure both van parking stalls and access isle have no more than 2% running and cross slope.

Notes:

Corrective Action: Work order # 461134 submitted on 5/2/2019

CORRECTED

Parking Lot

Finding: 3

The walkway contains abrupt vertical edges and/or variations over a 1/4 inch.

1/4 inch is the maximum vertical rise. Changes in level between 1/4 inch and 1/2 inch must be beveled at 1:2 or less.

Changes in level greater than 1/2 inch must be by way of a ramp.

2010 ADAS Section 303.3
Changes in level between 1/4 inch (6.4 mm) high minimum and 1/2 inch (13 mm) high maximum shall be beveled with a slope not steeper than 1:2.

2010 ADAS Section 303.2
Changes in level of 1/4 inch (6.4 mm) high maximum shall be permitted to be vertical.

Citation:

2010 ADAS Section: 303.3, 303.2

As Built:

Change in elevation greater than 1/4 inch

CORRECTED

Recommendation:

When resurfacing parking lot, ensure elevation changes are no greater than 1/4 inch. Also, path of travel from access isle next to van accessible stall should be no greater that 5% running slope and no greater than 2% cross slope leading up to the main entrance.

Notes:

Corrective Action: Work order # 461134 submitted on 5/2/2019

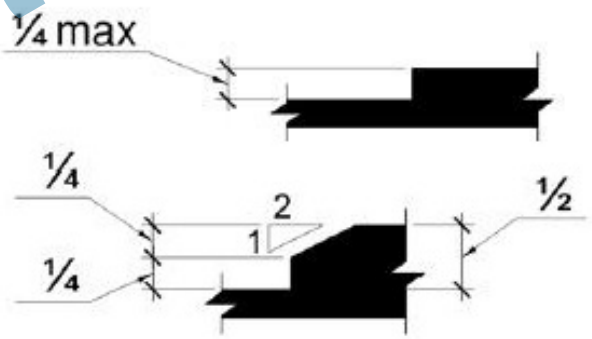

Parking Lot

Finding: 4

The concrete expansion joint is spaced greater than a 1/2 inch.

Openings in floor or ground surfaces shall not allow passage of a sphere more than 1/2 inch diameter. Elongated openings shall be placed so that the long dimension is perpendicular to the dominant direction of travel.

2010 ADAS Section 302.3
Openings in floor or ground surfaces shall not allow passage of a sphere more than 1/2 inch (13 mm) diameter except as allowed in 407.4.3, 409.4.3, 410.4, 810.5.3 and 810.10. Elongated openings shall be placed so that the long dimension is perpendicular to the dominant direction of travel.

Citation:

2010 ADAS Section: 302.3

As Built:

The concrete joint is spaced greater than a 1/2 inch.

Recommendation:

When parking lot is resurfaced, ensure a smooth transition from asphalt to concrete to avoid an elongated opening greather than 1/2 inch.

Notes:

Corrective Action: Work order # 461134 submitted on 5/2/2019

CORRECTED

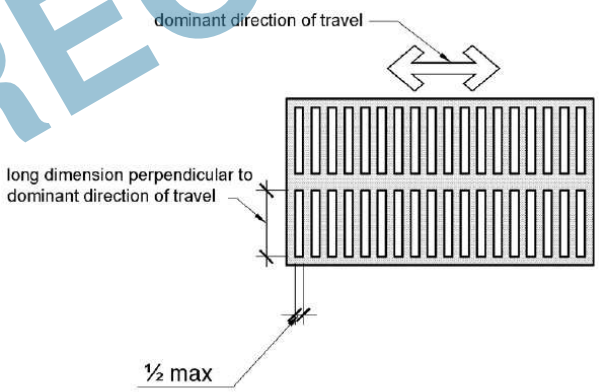

Main Entrance

Finding: 5

All automatic and power-assisted doors must comply with Builders Hardware Manufacturers' Association A156.10 or low energy operated doors complying with BHMA A156.19.

2010 ADAS Section 404.3
Automatic doors and automatic gates shall comply with 404.3. Full-powered automatic doors shall comply with ANSI/BHMA A156.10 (incorporated by reference, see "Referenced Standards" in Chapter 1). Low-energy and power-assisted doors shall comply with ANSI/BHMA A156.19 (1997 or 2002 edition) (incorporated by reference, see "Referenced Standards" in Chapter 1).

Citation:

2010 ADAS Section: 404.3

As Built:

Recommend installing automatic and power-assisted doors

Recommendation:

Recommend installing automatic power-assisted door openeners to the main entrance. Door openers should operate both front entrance doors at the same time.

Notes:

Corrective Action:None Building is a secured and not open to the public. Visitors must be escorted in and out.

ANSI/BHMA A156.19

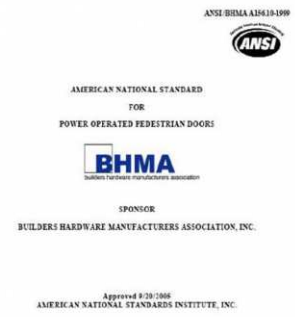

ANSI/BHMA A156.10

Interior Doors

Finding: 6

The door exceeds the maximum pressure to open the door.

Interior doors shall have a maximum opening force of 5 pounds.

These forces do not apply to the force required to retract latch bolts or disengage other devices that hold the door or gate in a closed position. Door closers and gate closers shall be adjusted so that from an open position of 90 degrees, the time required to move the door to a position of 12 degrees from the latch is 5 seconds minimum.

Door and gate spring hinges shall be adjusted so that from the open position of 70 degrees, the door or gate shall move to the closed position in 1.5 seconds minimum.

2010 ADAS Section 404.2.9
Fire doors shall have a minimum opening force allowable by the appropriate administrative authority. The force for pushing or pulling open a door or gate other than fire doors shall be as follows: 1. Interior hinged doors and gates: 5 pounds (22.2 N) maximum. 2. Sliding or folding doors: 5 pounds (22.2 N) maximum. These forces do not apply to the force required to retract latch bolts or disengage other devices that hold the door or gate in a closed position.

Citation:

2010 ADAS Section: 404.2.9

As Built:

Interior doors exceed 5 lbs maximum

Recommendation:

Adjust interior doors to conference rooms, restrooms, break rooms, to 5 lbs of pressure maximum. 3-4 lbs if preferred if possible.

Notes:

Corrective Action:

Restroom 140A

Finding: 7

The flush handle is located on the wrong side of the toilet.

Controls shall be operable with one hand and shall not require tight grasping, pinching or twisting. Controls for the flush valves shall be mounted on the wide side of toilet areas, no more than 48 inches above the floor.

2010 ADAS Section 604.6
Flush controls shall be hand operated or automatic. Hand operated flush controls shall comply with 309. Flush controls shall be located on the open side of the water closet except in ambulatory accessible compartments complying with 604.8.2.

Citation:

2010 ADAS Section: 604.6

As Built:

Flush on close side

Recommendation:

N/A - Refer to Finding

Notes:

N/A

Finding 297059 Main Photo

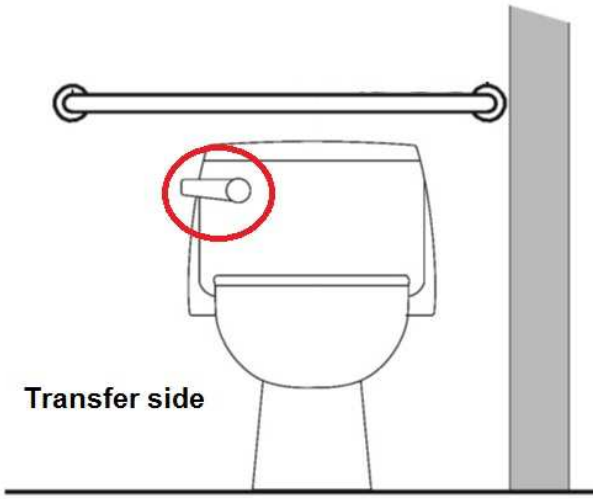

Restroom 140A

Finding: 8

The toilet seat cover dispenser is mounted too high and are not located in an accessible location.

Dispensers must have all operable parts a maximum of 48 inches above the floor and must be provided on an accessible route. Do not locate accessories above grab bars are within 1-1/2 inches of the side of grab bars.

2010 ADAS Section 205.1
Operable parts on accessible elements, accessible routes, and in accessible rooms and spaces shall comply with 309.

Citation:

2010 ADAS Section: 205.1

As Built:

58 inches above floor

Recommendation:

N/A - Refer to Finding

Notes:

N/A

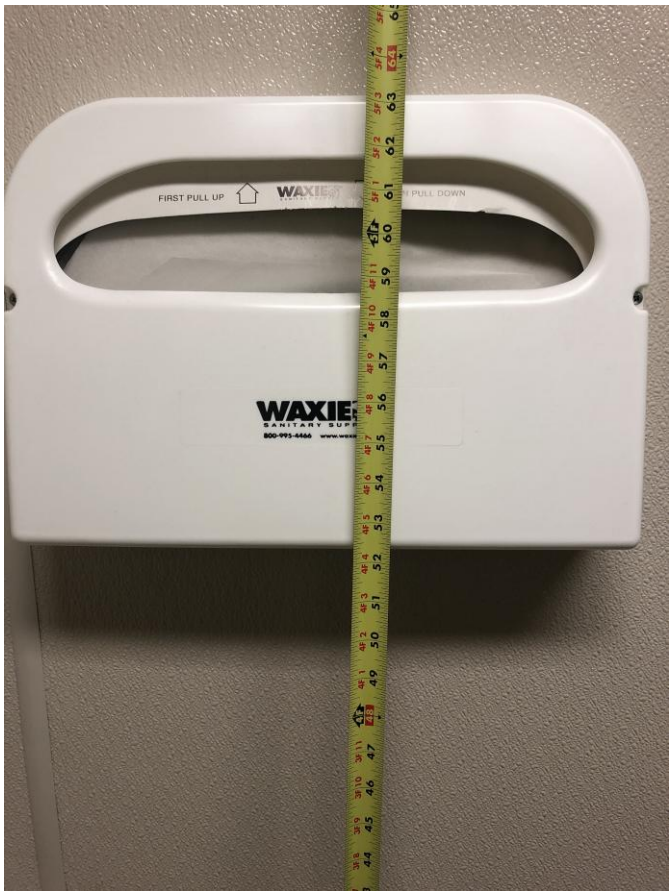

Finding 297060 Main Photo

Restroom 140A

Finding: 9

The clear floor space between the lavatory and the toilet is too narrow.

The required clearance around the water closet shall be permitted to overlap the water closet, associated grab bars, dispensers, sanitary napkin disposal units, coat hooks, shelves, accessible routes, clear floor space and clearances required at other fixtures, and the turning space. No other fixtures or obstructions shall be located within the required water closet clearance.

Clear floor space around the water closet shall be 60 inches minimum measured perpendicular from the side wall and 56 inches minimum measured perpendicular from the rear wall.

2010 ADAS Section 604.3.2
The required clearance around the water closet shall be permitted to overlap the water closet, associated grab bars, dispensers, sanitary napkin disposal units, coat hooks, shelves, accessible routes, clear floor space and clearances required at other fixtures, and the turning space. No other fixtures or obstructions shall be located within the required water closet clearance.

Citation:

2010 ADAS Section: 604.3.2

As Built:

Lavatory protrudes into required clear floor space

Recommendation:

N/A - Refer to Finding

Notes:

N/A

Finding 297061 Main Photo

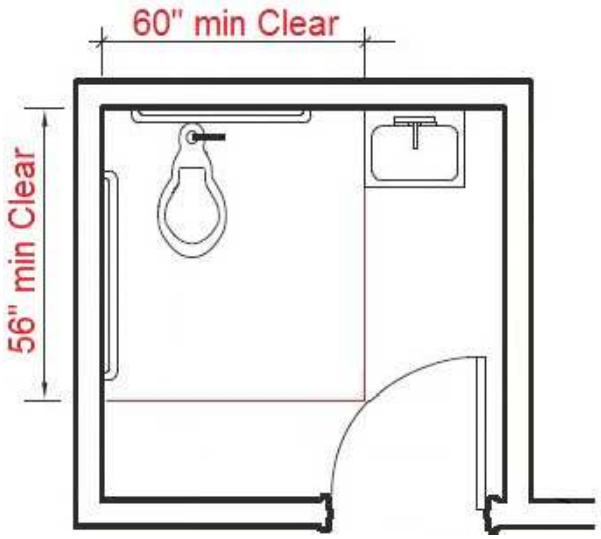

Restroom 140A

Finding: 10

Compliant knee space has not been provided under the lavatory.

The knee clearance shall be 11 inches minimum in depth at 9 inches above the floor, and 8 inches minimum in depth at 27 inches above the floor. The top of the lavatory rim may be no higher than 34 inches.

2010 ADAS Section 306.3.1
Space under an element between 9 inches (230 mm) and 27 inches (685 mm) above the finish floor or ground shall be considered knee clearance and shall comply with 306.3.

Citation:

2010 ADAS Section: 306.3.1

As Built:

25.5 inches of knee clearance at 8 inches from front

Recommendation:

N/A - Refer to Finding

Notes:

N/A

Finding 297062 Main Photo

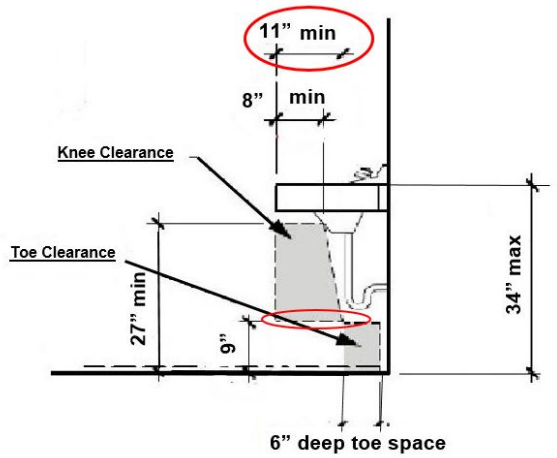

Restroom 140A

Finding: 11

The rear grab bar does not extend adequately past the centerline of the toilet on the wall side.

The rear grab bar must be a minimum of 36 inches long and extend from the centerline of the toilet 12 inches minimum on one side and 24 inches minimum on the other side.

Grab bars shall be installed in a horizontal position, 33 inches minimum and 36 inches maximum above the finish floor measured to the top of the gripping surface and the space between the grab bar and the top of the tank shall be 1-1/2 inches minimum.

2010 ADAS Section 604.5.2
The rear wall grab bar shall be 36 inches (915 mm) long minimum and extend from the centerline of the water closet 12 inches (305 mm) minimum on one side and 24 inches (610 mm) minimum on the other side.

Citation:

2010 ADAS Section: 604.5.2

As Built:

10 inches from toilet centerline

Recommendation:

N/A - Refer to Finding

Notes:

N/A

Finding 297063 Main Photo

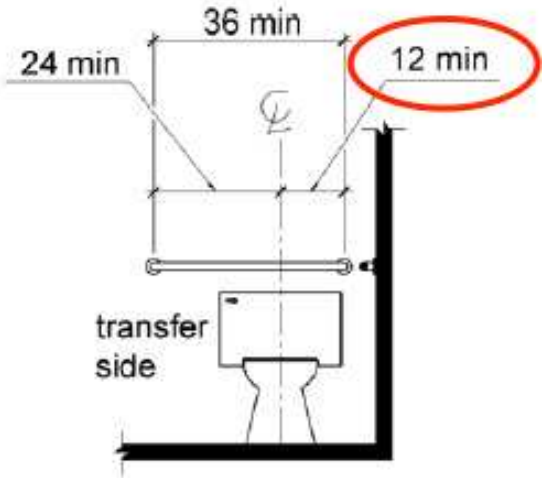

Restroom 140A

Finding: 12

The side grab bar is not long enough.

The side grab bar must extend at least 54 inches minimum beyond the rear wall and start a maximum of 12 inches from the rear wall. A 42 inch grab bar installed the maximum distance from the rear wall (12 inches) will leave the leading end 54 inches from the rear wall. Grab bars shall be installed in a horizontal position, 33 inches minimum and 36 inches maximum above the finish floor measured to the top of the gripping surface.

2010 ADAS Section 604.5.1
The side wall grab bar shall be 42 inches (1065 mm) long minimum, located 12 inches (305 mm) maximum from the rear wall and extending 54 inches (1370 mm) minimum from the rear wall.

Citation:

2010 ADAS Section: 604.5.1

As Built:

6 inches from rear wall

Recommendation:

N/A - Refer to Finding

Notes:

N/A

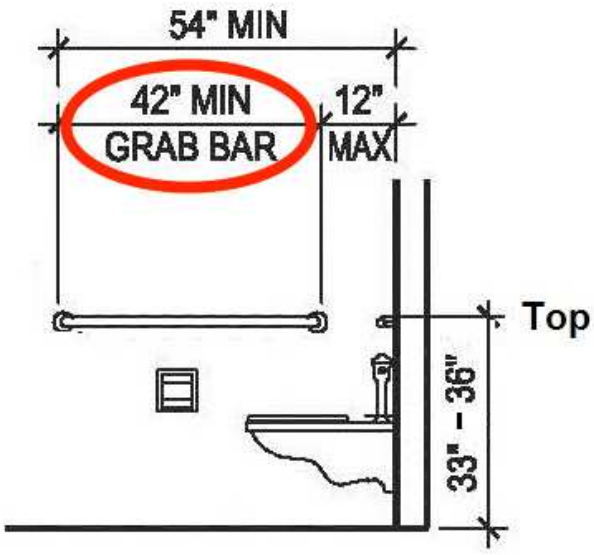

Finding 297064 Main Photo

Restroom 140A

Finding: 13

The toilet paper is not installed within the compliant height range.

Toilet paper dispensers shall be 7 inches minimum and 9 inches maximum in front of the water closet measured to the centerline of the dispenser. The outlet of the dispenser shall be 15 inches minimum and 48 inches maximum above the finish floor and shall not be located behind grab bars. Dispensers shall not be of a type that controls delivery or that does not allow continuous paper flow. There shall be a clearance of 1 1/2 inches minimum below the grab bar.

2010 ADAS Section 604.7
Toilet paper dispensers shall comply with 309.4 and shall be 7 inches (180 mm) minimum and 9 inches (230 mm) maximum in front of the water closet measured to the centerline of the dispenser. The outlet of the dispenser shall be 15 inches (380 mm) minimum and 48 inches (1220 mm) maximum above the finish floor and shall not be located behind grab bars. Dispensers shall not be of a type that controls delivery or that does not allow continuous paper flow.

Citation:

2010 ADAS Section: 604.7

As Built:

N/A

Recommendation:

N/A - Refer to Finding

Notes:

N/A

Finding 297065 Main Photo

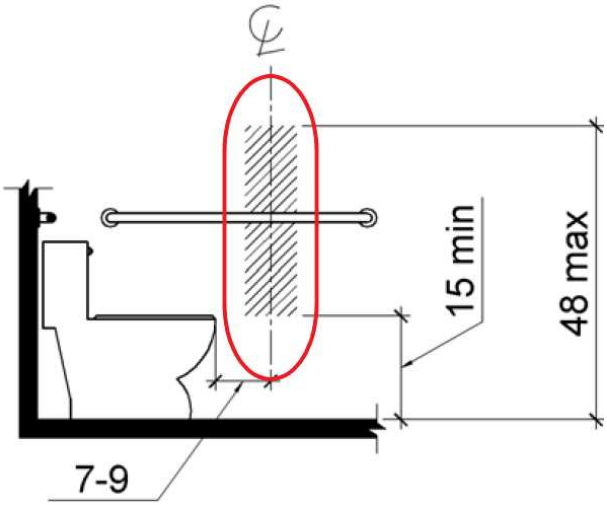

Men's Restroom Room 129

Finding: 14

Compliant knee space has not been provided under the lavatory.

The knee clearance shall be 11 inches minimum in depth at 9 inches above the floor, and 8 inches minimum in depth at 27 inches above the floor. The top of the lavatory rim may be no higher than 34 inches.

2010 ADAS Section 306.3.1
Space under an element between 9 inches (230 mm) and 27 inches (685 mm) above the finish floor or ground shall be considered knee clearance and shall comply with 306.3.

Citation:

2010 ADAS Section: 306.3.1

As Built:

25.5 inches above the floor

Recommendation:

N/A - Refer to Finding

Notes:

N/A

Finding 297066 Main Photo

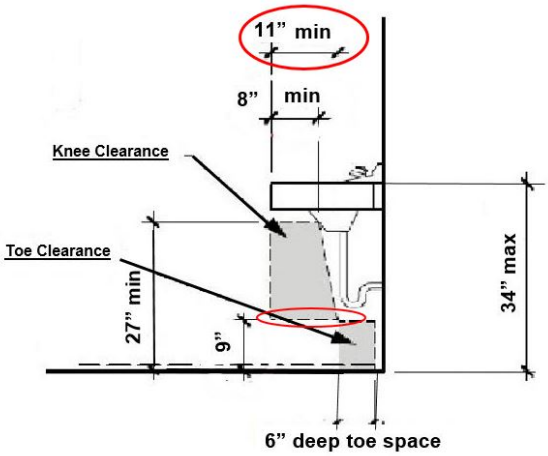

Men's Restroom Room 129

Finding: 15

The water and drain pipes under the lavatory are not adequately insulated.

Water supply and drain pipes under lavatories and sinks shall be insulated or otherwise configured to protect against contact. There shall be no sharp or abrasive surfaces under lavatories and sinks.

2010 ADAS Section 606.5
Water supply and drain pipes under lavatories and sinks shall be insulated or otherwise configured to protect against contact. There shall be no sharp or abrasive surfaces under lavatories and sinks.

Citation:

2010 ADAS Section: 606.5

As Built:

N/A

Recommendation:

N/A - Refer to Finding

Notes:

N/A

Finding 297067 Main Photo

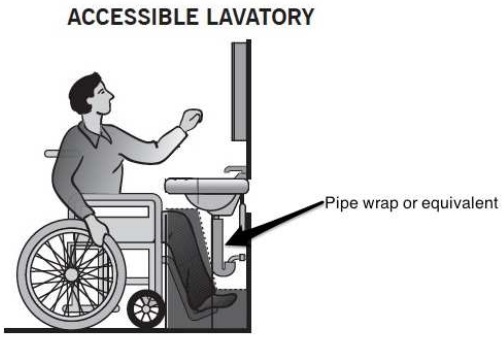

Men's Restroom Room 129

Finding: 16

The rear grab bar does not extend adequately past the centerline of the toilet on the wall side.

The rear grab bar must be a minimum of 36 inches long and extend from the centerline of the toilet 12 inches minimum on one side and 24 inches minimum on the other side.

Grab bars shall be installed in a horizontal position, 33 inches minimum and 36 inches maximum above the finish floor measured to the top of the gripping surface and the space between the grab bar and the top of the tank shall be 1-1/2 inches minimum.

2010 ADAS Section 604.5.2
The rear wall grab bar shall be 36 inches (915 mm) long minimum and extend from the centerline of the water closet 12 inches (305 mm) minimum on one side and 24 inches (610 mm) minimum on the other side.

Citation:

2010 ADAS Section: 604.5.2

As Built:

11 inches from side wall

Recommendation:

N/A - Refer to Finding

Notes:

N/A

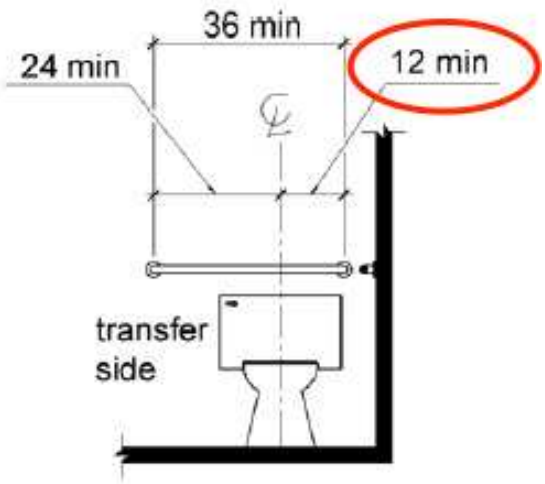

Finding 297068 Main Photo

Men's Restroom Room 129

Finding: 17

The compartment door is not self closing.

The water closet compartment shall be equipped with a door that has an automatic-closing device.

2010 ADAS Section 604.8.1.2
Toilet compartment doors, including door hardware, shall comply with 404 except that if the approach is to the latch side of the compartment door, clearance between the door side of the compartment and any obstruction shall be 42 inches (1065 mm) minimum. Doors shall be located in the front partition or in the side wall or partition farthest from the water closet. Where located in the front partition, the door opening shall be 4 inches (100 mm) maximum from the side wall or partition farthest from the water closet. Where located in the side wall or partition, the door opening shall be 4 inches (100 mm) maximum from the front partition. The door shall be self-closing. A door pull complying with 404.2.7 shall be placed on both sides of the door near the latch. Toilet compartment doors shall not swing into the minimum required compartment area.

Citation:

2010 ADAS Section: 604.8.1.2

As Built:

No self closing hinge exist

Recommendation:

N/A - Refer to Finding

Notes:

N/A

Finding 297069 Main Photo

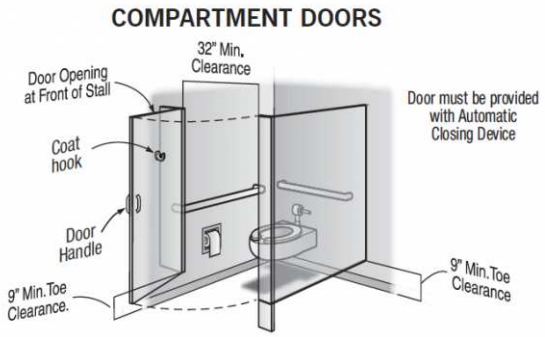

Men's Restroom Room 129

Finding: 18

The mirror is mounted too high.

Mirrors must have the bottom edge of the reflecting surface a maximum of 40 inches above the floor if above a sink or counter. Mirrors not located above lavatories or countertops shall be installed with the bottom edge of the reflecting surface 35 inches maximum above the finish floor or ground.

2010 ADAS Section 603.3
Mirrors located above lavatories or countertops shall be installed with the bottom edge of the reflecting surface 40 inches (1015 mm) maximum above the finish floor or ground. Mirrors not located above lavatories or countertops shall be installed with the bottom edge of the reflecting surface 35 inches (890 mm) maximum above the finish floor or ground.

Citation:

2010 ADAS Section: 603.3

As Built:

43 inches AFF

Recommendation:

N/A - Refer to Finding

Notes:

N/A

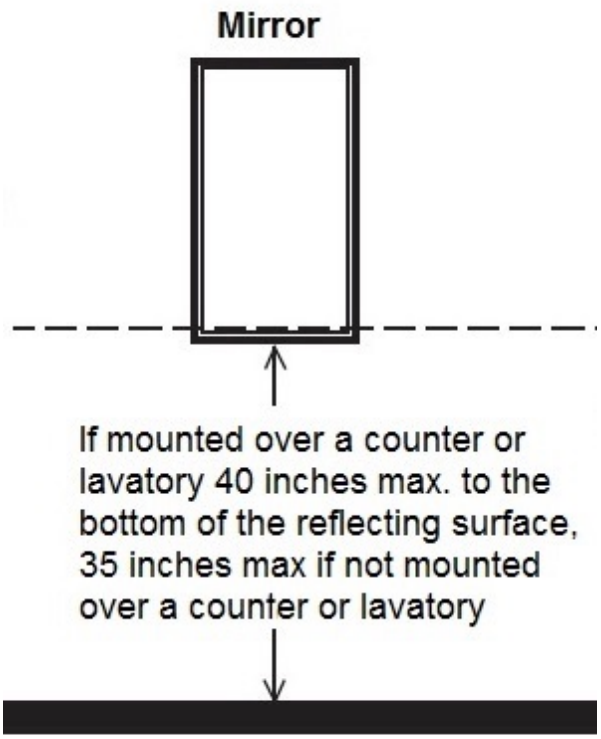

Finding 297070 Main Photo

Men's Restroom Room 129

Finding: 19

The door is equipped with a door closer and returns to a closed position too quickly.

Door closers and gate closers shall be adjusted so that from an open position of 90 degrees, the time required to move the door to a position of 12 degrees from the latch is 5 seconds minimum.

2010 ADAS Section 404.2.8.1
Door closers and gate closers shall be adjusted so that from an open position of 90 degrees, the time required to move the door to a position of 12 degrees from the latch is 5 seconds minimum.

Citation:

2010 ADAS Section: 404.2.8.1

As Built:

Closes to fast (2 seconds)

Recommendation:

N/A - Refer to Finding

Notes:

N/A

Finding 297071 Main Photo

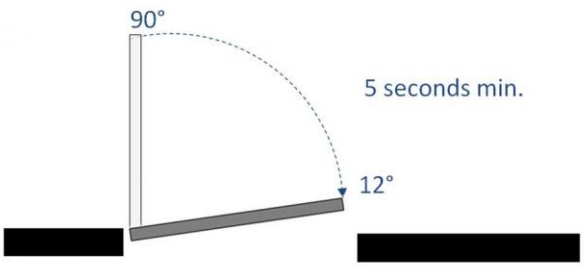

Men's Restroom Room 129

Finding: 20

Compliant knee space has not been provided under the lavatory inside the toilet compartment.

The knee clearance shall be 11 inches minimum in depth at 9 inches above the floor, and 8 inches minimum in depth at 27 inches above the floor. The top of the lavatory rim may be no higher than 34 inches.

2010 ADAS Section 306.3.1
Space under an element between 9 inches (230 mm) and 27 inches (685 mm) above the finish floor or ground shall be considered knee clearance and shall comply with 306.3.

Citation:

2010 ADAS Section: 306.3.1

As Built:

26 inches above the floor

Recommendation:

N/A - Refer to Finding

Notes:

N/A

Finding 297077 Main Photo

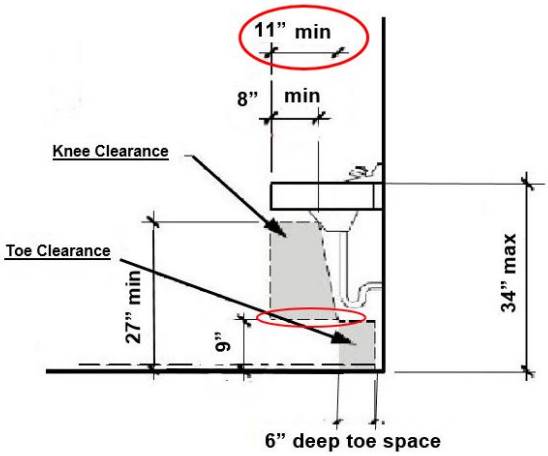

Women's Restroom Room 130

Finding: 21

Compliant knee space has not been provided under the lavatory.

The knee clearance shall be 11 inches minimum in depth at 9 inches above the floor, and 8 inches minimum in depth at 27 inches above the floor. The top of the lavatory rim may be no higher than 34 inches.

2010 ADAS Section 306.3.1
Space under an element between 9 inches (230 mm) and 27 inches (685 mm) above the finish floor or ground shall be considered knee clearance and shall comply with 306.3.

Citation:

2010 ADAS Section: 306.3.1

As Built:

25 inches above the floor

Recommendation:

N/A - Refer to Finding

Notes:

N/A

Finding 297072 Main Photo

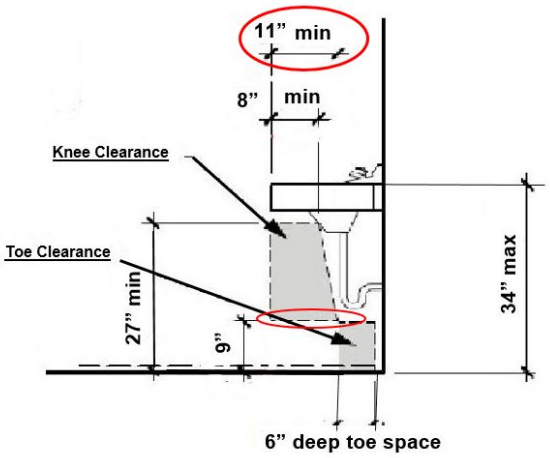

Women's Restroom Room 130

Finding: 22

The mirror is mounted too high.

Mirrors must have the bottom edge of the reflecting surface a maximum of 40 inches above the floor if above a sink or counter. Mirrors not located above lavatories or countertops shall be installed with the bottom edge of the reflecting surface 35 inches maximum above the finish floor or ground.

2010 ADAS Section 603.3
Mirrors located above lavatories or countertops shall be installed with the bottom edge of the reflecting surface 40 inches (1015 mm) maximum above the finish floor or ground. Mirrors not located above lavatories or countertops shall be installed with the bottom edge of the reflecting surface 35 inches (890 mm) maximum above the finish floor or ground.

Citation:

2010 ADAS Section: 603.3

As Built:

43 inches AFF

Recommendation:

N/A - Refer to Finding

Notes:

N/A

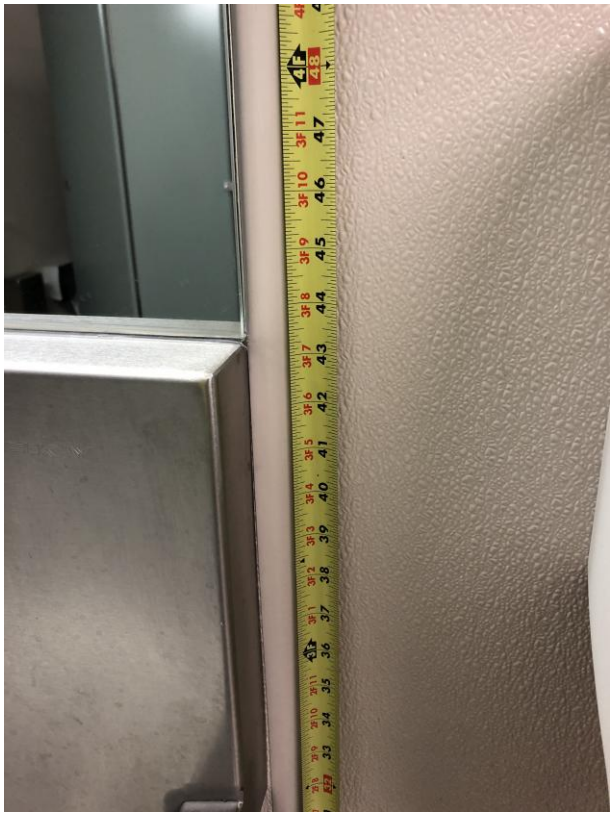

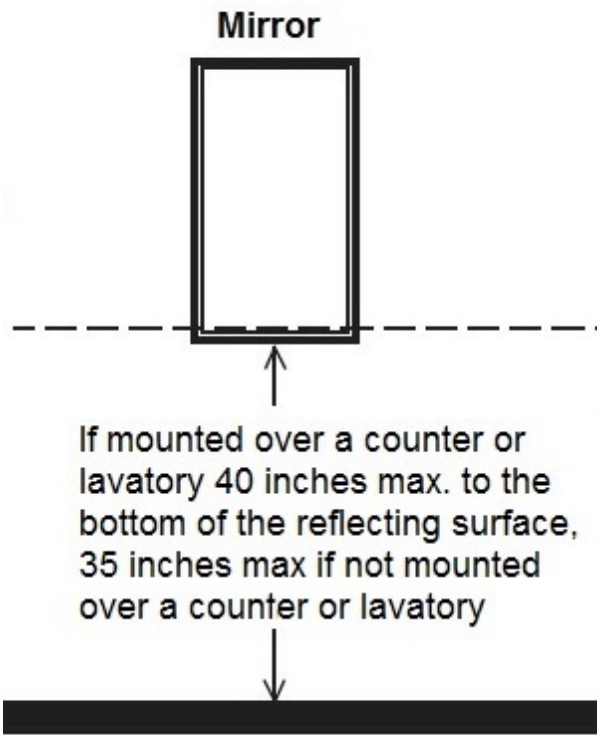

Finding 297073 Main Photo

Women's Restroom Room 130

Finding: 23

The rear grab bar does not extend adequately past the centerline of the toilet on the wall side.

The rear grab bar must be a minimum of 36 inches long and extend from the centerline of the toilet 12 inches minimum on one side and 24 inches minimum on the other side.

Grab bars shall be installed in a horizontal position, 33 inches minimum and 36 inches maximum above the finish floor measured to the top of the gripping surface and the space between the grab bar and the top of the tank shall be 1-1/2 inches minimum.

2010 ADAS Section 604.5.2
The rear wall grab bar shall be 36 inches (915 mm) long minimum and extend from the centerline of the water closet 12 inches (305 mm) minimum on one side and 24 inches (610 mm) minimum on the other side.

Citation:

2010 ADAS Section: 604.5.2

As Built:

11 inches from side wall

Recommendation:

N/A - Refer to Finding

Notes:

N/A

Finding 297074 Main Photo

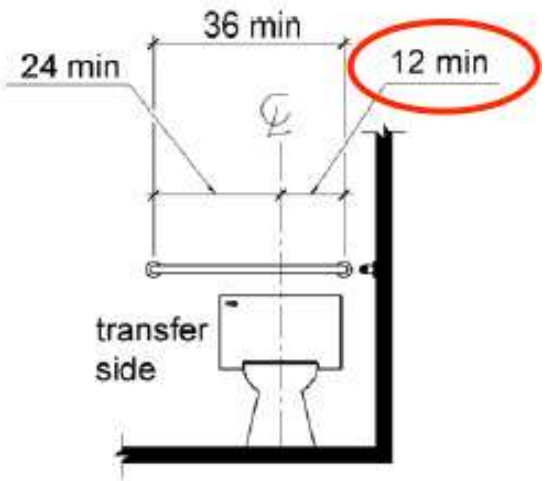

Women's Restroom Room 130

Finding: 24

The door is equipped with a door closer and returns to a closed position too quickly.

Door closers and gate closers shall be adjusted so that from an open position of 90 degrees, the time required to move the door to a position of 12 degrees from the latch is 5 seconds minimum.

2010 ADAS Section 404.2.8.1
Door closers and gate closers shall be adjusted so that from an open position of 90 degrees, the time required to move the door to a position of 12 degrees from the latch is 5 seconds minimum.

Citation:

2010 ADAS Section: 404.2.8.1

As Built:

Closes to fast (2 seconds)

Recommendation:

N/A - Refer to Finding

Notes:

N/A

Finding 297075 Main Photo

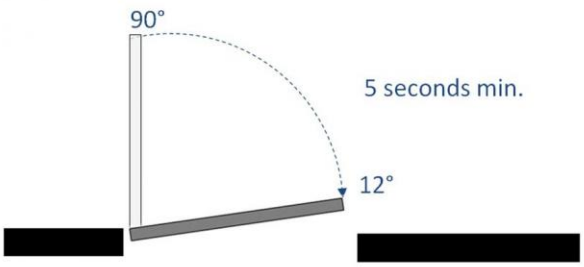

Women's Restroom Room 130

Finding: 25

Compliant knee space has not been provided under the lavatory inside the toilet compartment.

The knee clearance shall be 11 inches minimum in depth at 9 inches above the floor, and 8 inches minimum in depth at 27 inches above the floor. The top of the lavatory rim may be no higher than 34 inches.

2010 ADAS Section 306.3.1
Space under an element between 9 inches (230 mm) and 27 inches (685 mm) above the finish floor or ground shall be considered knee clearance and shall comply with 306.3.

Citation:

2010 ADAS Section: 306.3.1

As Built:

26 inches above the floor

Recommendation:

N/A - Refer to Finding

Notes:
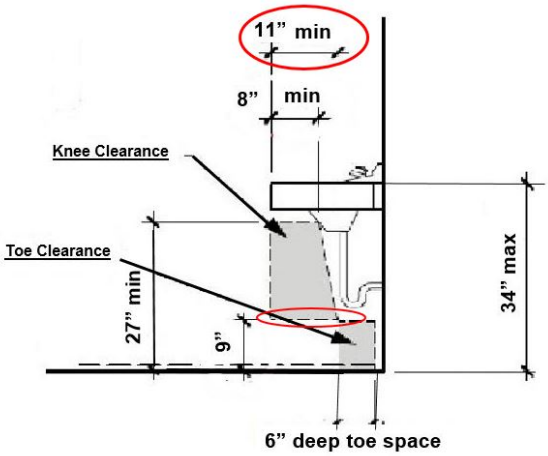
N/A